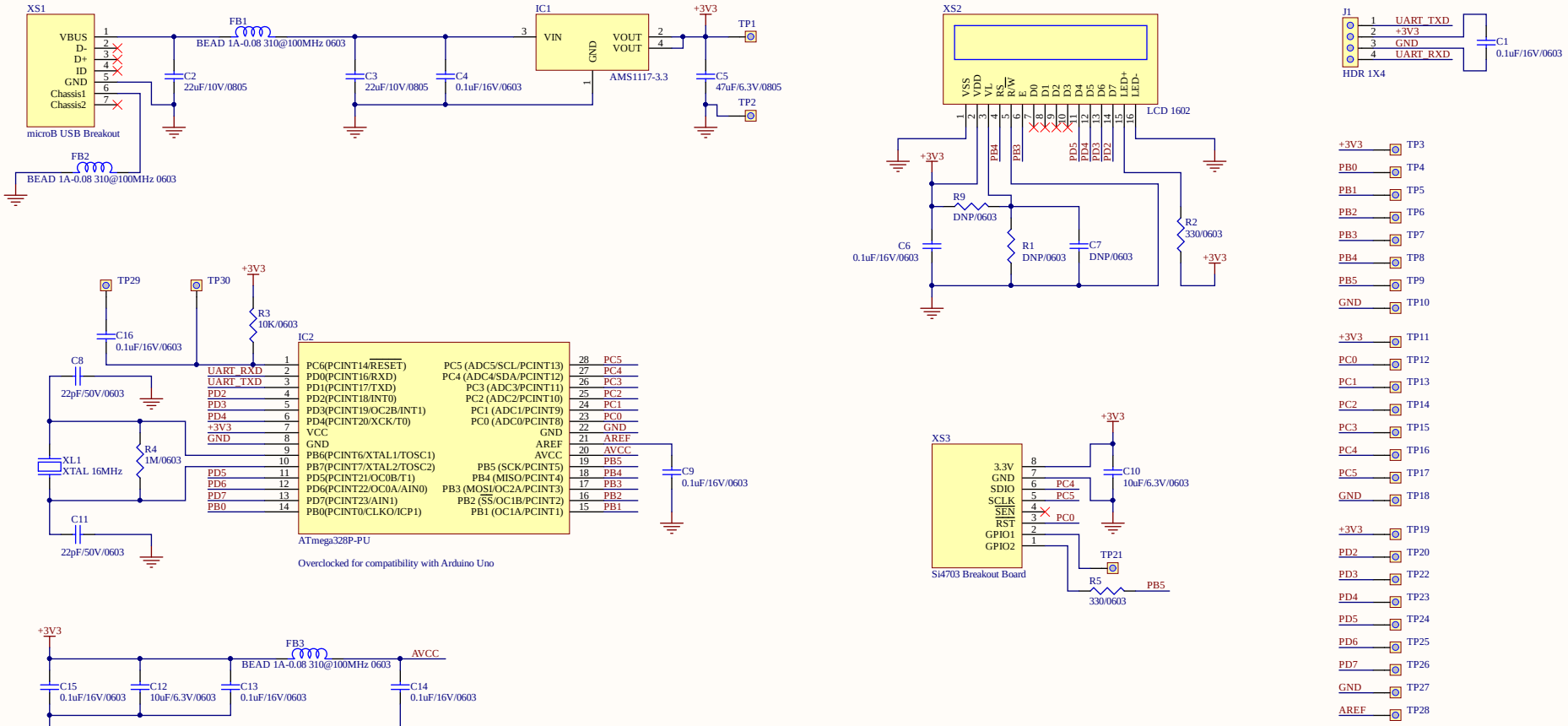

Arduino I/O Mappings

PD0	0
PD1	1
PD2	2
PD3	3
PD4	4
PD5	5
PD6	6
PD7	7
PC0	A0
PC1	A1
PC2	A2
PC3	A3
PC4	A4
PC5	A5
PB0	8
PB1	9
PB2	10
PB3	11
PB4	12
PB5	13

NOTES

Part numbers used are for reference only, compatible parts may be used.

Components with the label DNP are not to be installed by default.

Title	Si4703 FM Radio	
Size: A3	Number: YK016	Revision: 1.0
Date: 6/7/2018		Sheet 1 of 1
File: D:\Project\..\Si4703_Radio.SchDoc		Drawn By: www.cnblogs.com/elysium