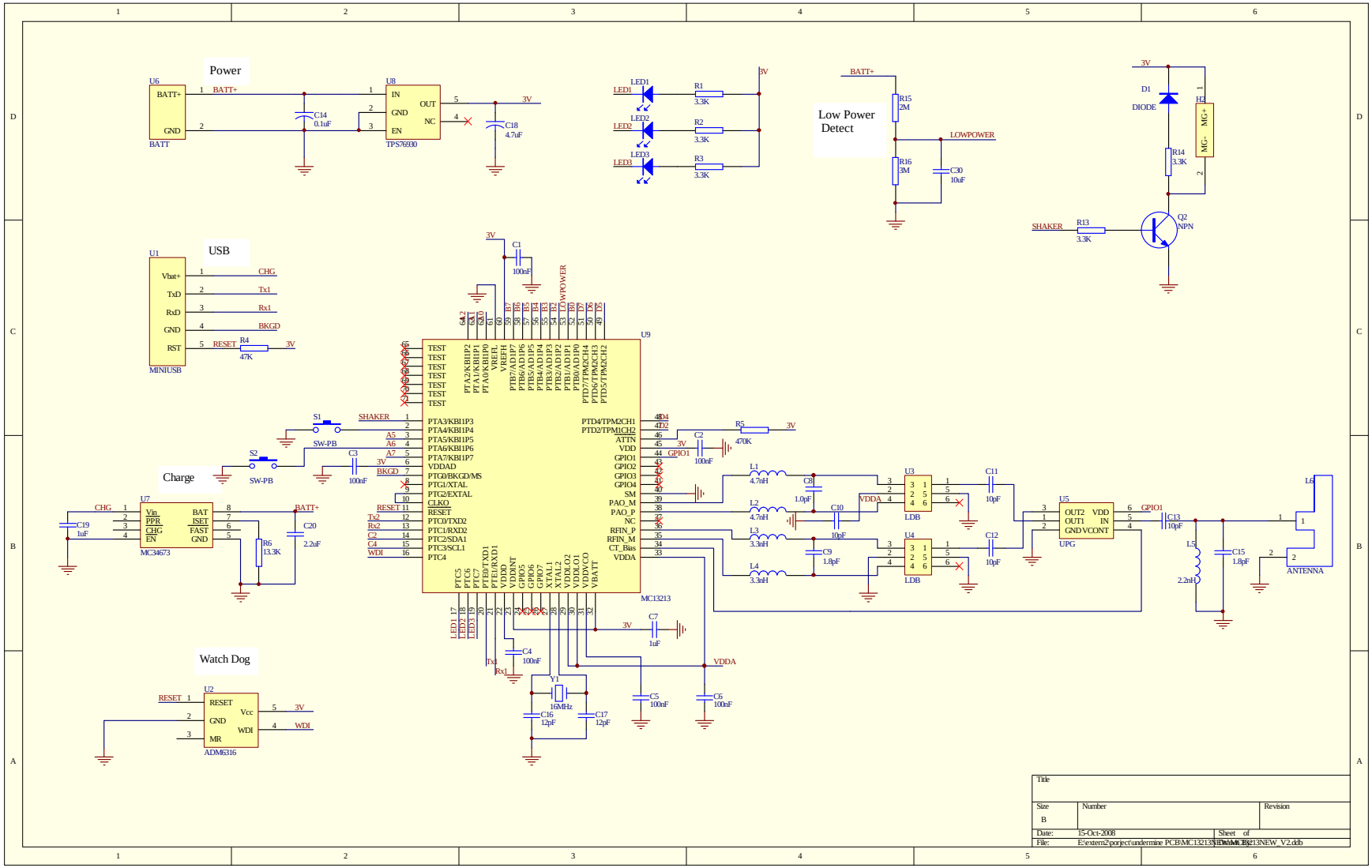
Power
U6
BATT+
GND
BATT
U8
IN
GND
EN
OUT
NC
TPS76930
C14
0.1uF
C18
4.7uF
3V
LED1
LED2
LED3
R1
R2
R3
3.3K
Low Power
Detect
BATT+
R15
2M
R16
3M
LOWPOWER
C30
10uF
D1
DIODE
R14
3.3K
H2
MG+
MG-
SHAKER
R13
3.3K
Q2
NPN
USB
U1
Vbat+
TxD
RxD
GND
RST
MINIUSB
CHG
Tx1
Rx1
BKGD
RESET
R4
47K
C1
100nF
U9
MC13213
PTA3/KBI1P3
PTA4/KBI1P4
PTA5/KBI1P5
PTA6/KBI1P6
PTA7/KBI1P7
VDDAD
PTG0/BKGD/MS
PTG1/XTAL
PTG2/EXTAL
CLKO
RESET
PTC0/TXD2
PTC1/RXD2
PTC2/SDA1
PTC3/SCL1
PTC4
PTD4/TPM2CH1
PTD2/TPM1CH2
ATTN
VDD
GPIO1
GPIO2
GPIO3
GPIO4
SM
PAO_M
PAO_P
NC
RFIN_P
RFIN_M
CT_Bias
VDDA
VBATT
S1
SW-PB
S2
SW-PB
C3
100nF
C2
470K
R5
Charge
U7
MC34673
Vin
PPR
CHG
EN
BAT
ISET
FAST
GND
C19
1uF
R6
13.3K
C20
2.2uF
L1
4.7nH
L2
4.7nH
L3
3.3nH
L4
3.3nH
C8
1.0pF
C9
1.8pF
C10
10pF
C11
10pF
C12
10pF
U3
U4
LDB
U5
UPG
OUT2
OUT1
GND
VDD
IN
VCONT
C13
10pF
L5
2.2nH
C15
1.8pF
L6
ANTENNA
Watch Dog
U2
ADM6316
RESET
GND
MR
Vcc
WDI
C7
1uF
C4
100nF
Y1
16MHz
C16
12pF
C17
12pF
C5
100nF
C6
100nF
Title
Size
B
Number
Revision
Date:
15-Oct-2008
Sheet of
File:
E:\extern2\porject\undermine PCB\MC13213NEW\MC13213NEW_V2.ddb